CRD1200 A

PEZZI DI RICAMBIO
PIECES DETACHEES
SPARE PARTS
ERSATZTEILE

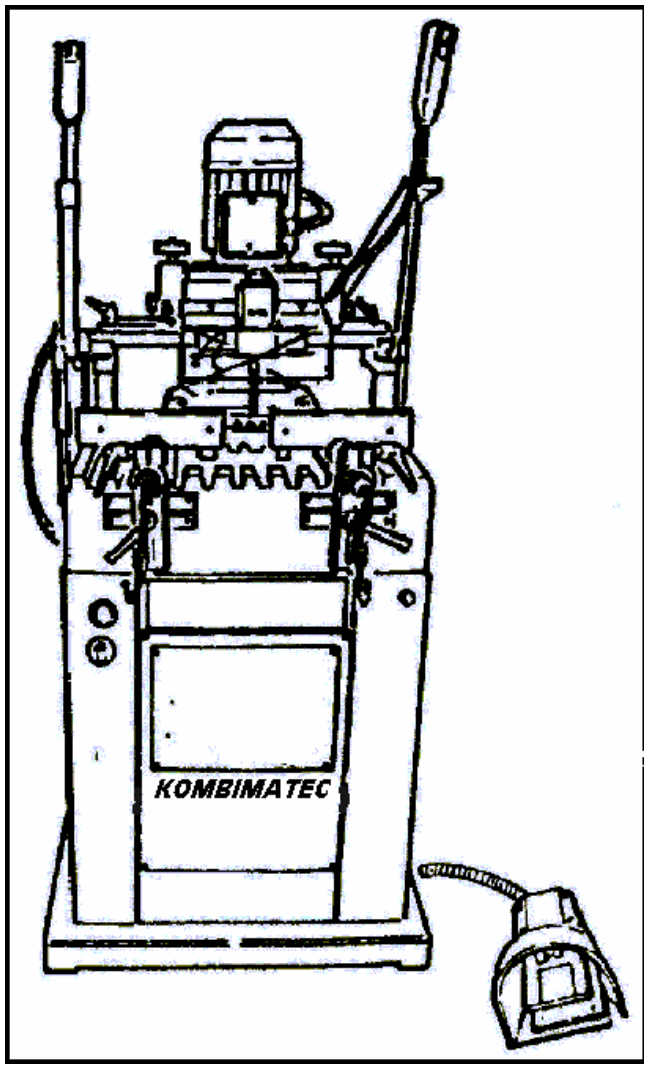

PAGE 1						
COD.	**POS.**	**DESCRIZIONE**	**DESCRIPTION**	**DESCRIPTION**	**BESCHREIBUNG**	**DESCRIPCION**
2800025	01	PANNELLO COMANDI	CONTROL PANEL	PANNEAU DE CONTROLE	KONTROL TAFEL	PANEL DE COMANDO
1490250	02	INTERRUTTORE	SWITCH	INTERRUPTEUR	SCHALTER	INTERRUPTOR
1490242	03	PORTA FUSIBILI	FUSE CARRIER	PORTE FUSIBLES	SICHERUNGENHALTER	PORTAFUSIBLES
1490852	04	GRUPPO FILTRO FRL 1/8	FILTER GROUP	UNITE' DE CONDITIONNEMENT	WARTUNGSEINHEIT	GRUPO FILTRO
1490249	05	SCHEDA 8 VA	8 VA CARD	FICHE DE 8 VA	8 VA KARTE	FICHA DE 8 VA
1490249	06	SCHEDA 8 VA	8 VA CARD	FICHE DE 8 VA	8 VA KARTE	FICHA DE 8 VA
2800001	07	CARTER	GUARD	PROTECTION	SCHUTZVORRICHTUNG	PROTECCION
1490828	08	ATTUATORE A GHIERA	SELECTOR	SELECTEUR	WALHER	SELECTOR
2800000	09	BASAMENTO	FRAME	SOCLE	UNTERGESTELL	BANCADA
1490827	10	VALVOLA 3 VIE AI9400	VALVE AI9400	VALVE AI9400	VENTILE AI9400	VALVULA AI9400
1490252	11	FUSIBILE 8 A	FUSE	FUSIBLE	SICHERUNG	FUSIBLE
1490856	12	PRESSOSTATO 24V	PRESSURE VALVE	PRESSOSTAT	DRUCKWAHLER	PRESSOSTATO
2690816	13	PEDALE	PEDAL	PEDAL	VENTILE	PEDALE
2600003	14	SUPP. GUAINA PEDALE	SUPPORT	SUPPORT	AUFLAGE	SOPORTE
1490924	15	PIEDE FISSO	FIX FOOT	PIED FIXE	FESTE FUß	PIE FIJO

PAGE.1

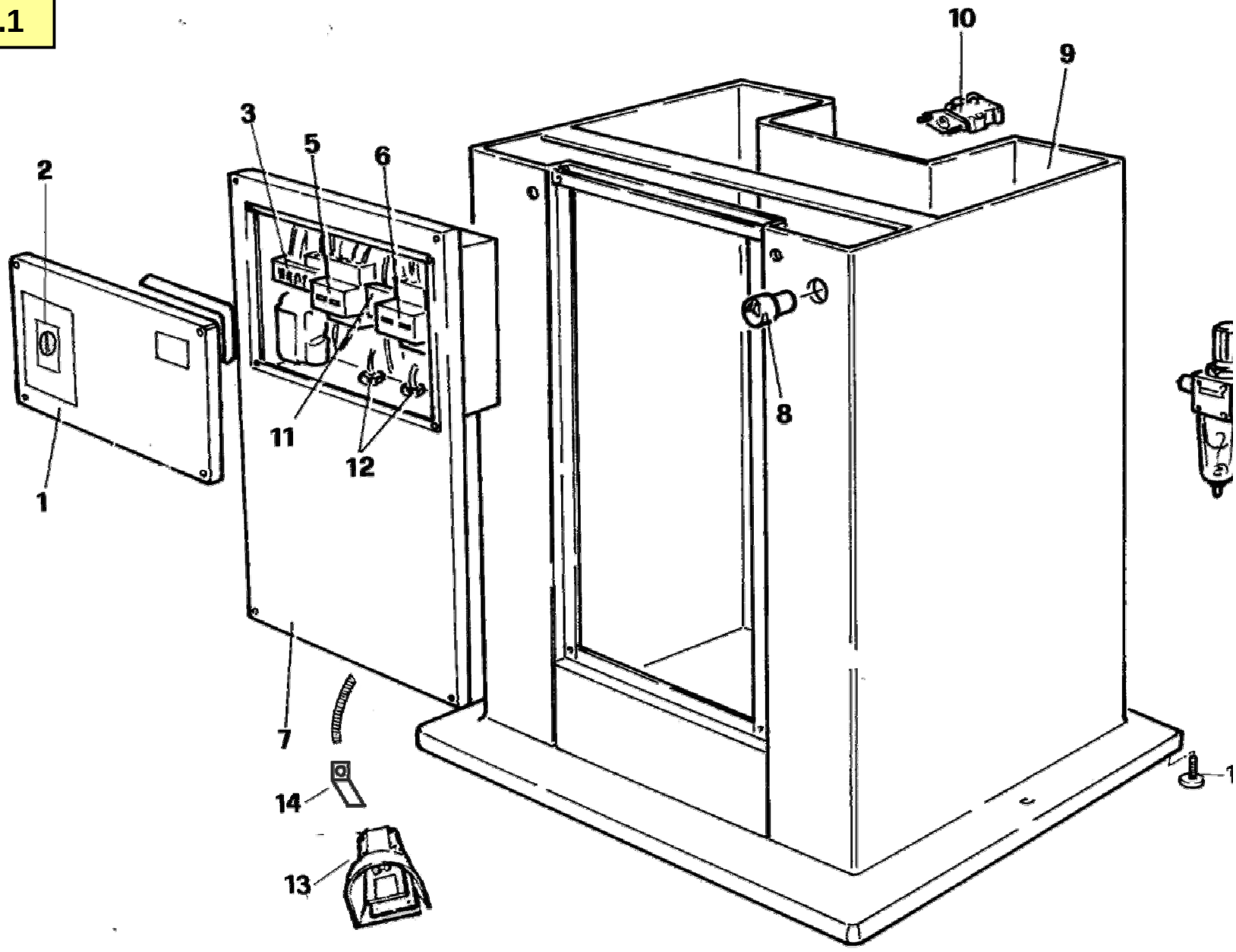

PAGE 2

COD.	POS.	DESCRIZIONE	DESCRIPTION	DESCRIPTION	BESCHREIBUNG	DESCRIPCION
1402021	01	FLANGIA	FLANGE	BRIDE	FLANSCH	BRIDA
1411145	02	PROTEZIONE	GUARD	PROTECTION	SCHUTZVORRICHTUNG	PROTECCION
1490315	03	LEVA A SCATTO	RELEASE HANDLE	LEVIER A DECLIC	SPRINGGRIFF	PALANCA
1411007	04	BATTUTA	STOP	BUTEE	ANSCHLAG	TOPE
1404046	05	ZOCCHETTO	PLATE	PLATRE	PLATTE	ZOCALOS
1402005	06	TESTA PORTAMOTORE	MOTOR HOLDER'S HEAD	TETE PORTE MOTEUR	MOTORTRAEGER KOPF	CABEZA PORTA MOTOR
1411022	07	COPERCHIO SUP.RE	UPPER COVER	COUVERCLE SUP.	OBERE DECKEL	TAPA SUP.
2191015	08	STECCA METRICA	METRIC RULER	REGLE METRIQUE	MAßSTAB	REGLA METRICA
1411030	09	FLANGIA	FLANGE	BRIDE	FLANSCH	BRIDA
1405040	10	GHIERA	METAL RING	EMBOUT	NUTMUTTER	ABRAZADERA
1490101	11	MOTORE	MOTOR	MOTEUR	MOTOR	MOTOR
1411029	12	FLANGIA	FLANGE	BRIDE	FLANSCH	BRIDA
1491001	13	STECCA METRICA	METRIC RULER	REGLE METRIQUE	MAßSTAB	REGLA METRICA
1404040	14	ZOCCHETTO	PLATE	PLATRE	PLATTE	ZOCALOS
1404011	15	STAFFA BLOCCAGGIO	BRACKET	ETRIER	BUGEL	SOPORTE
1402009	16	PULEGGIA	PULLEY	POULIE	SCHREIBE	POLEA
1490410	17	CUSCINETTO	BEARINGS	ROULEMENTS	LAGER	COJINETE
1491222	18	CINGHIA	BELT	COURROIE	RIEME	CORREA
1402020	19	PULEGGIA	PULLEY	POULIE	SCHREIBE	POLEA
1490409	20	CUSCINETTO	BEARINGS	ROULEMENTS	LAGER	COJINETE
1407039	21	MANDRINO	SPINDLE	MANDRIN	SPINDEL	PORTA BROCAS
1411141	22	PINZA	COLLET	PINCE	SPANNZANGE	PINZA
1411023	23	COPERCHIO INF.RE	LOWER COVER	COUVERCLE INF.	DECKEL	TAPA INF.
1490314	24	LEVA A SCATTO	RELEASE HANDLE	LEVIER A DECLIC	SPRINGGRIFF	PALANCA
1402006	25	SUPPORTO LEVA DX	SUPPORT R. LEVER	SUPPORT LEVIER D.	R. AUSHEBUNGAUFLAGE	SOPORTE PALANCA D
1490420	26	GE 17 FO 2 RS	GE 17 FO 2 RS	GE 17 FO 2 RS	GE 17 FO 2 RS	GE 17 FO 2 RS
1411131	27	TASTATORE	COPIER PIN	TATEUR	TASTER	PALPADOR
1411024	28	CORPO TASTATORE	COPIER PIN GROUP	GROUPE TATEUR	TASTERGRUPPE	GRUPO PALPADOR
1491004	29	TARGHETTA	PLATE	PLATRE	PLATTE	TARJETA
1406032	30	ALBERINO TASTATORE	COPIER PIN SHAFT	ARBRE TATEUR	TASTERWELLE	EJE PALPADOR
1491166	31	MOLLA	SPRING	RESSORT	FEDER	MUELLE
0690413	32	OR 4081	OR 4081	OR 4081	OR 4081	OR 4081

PAGE.2

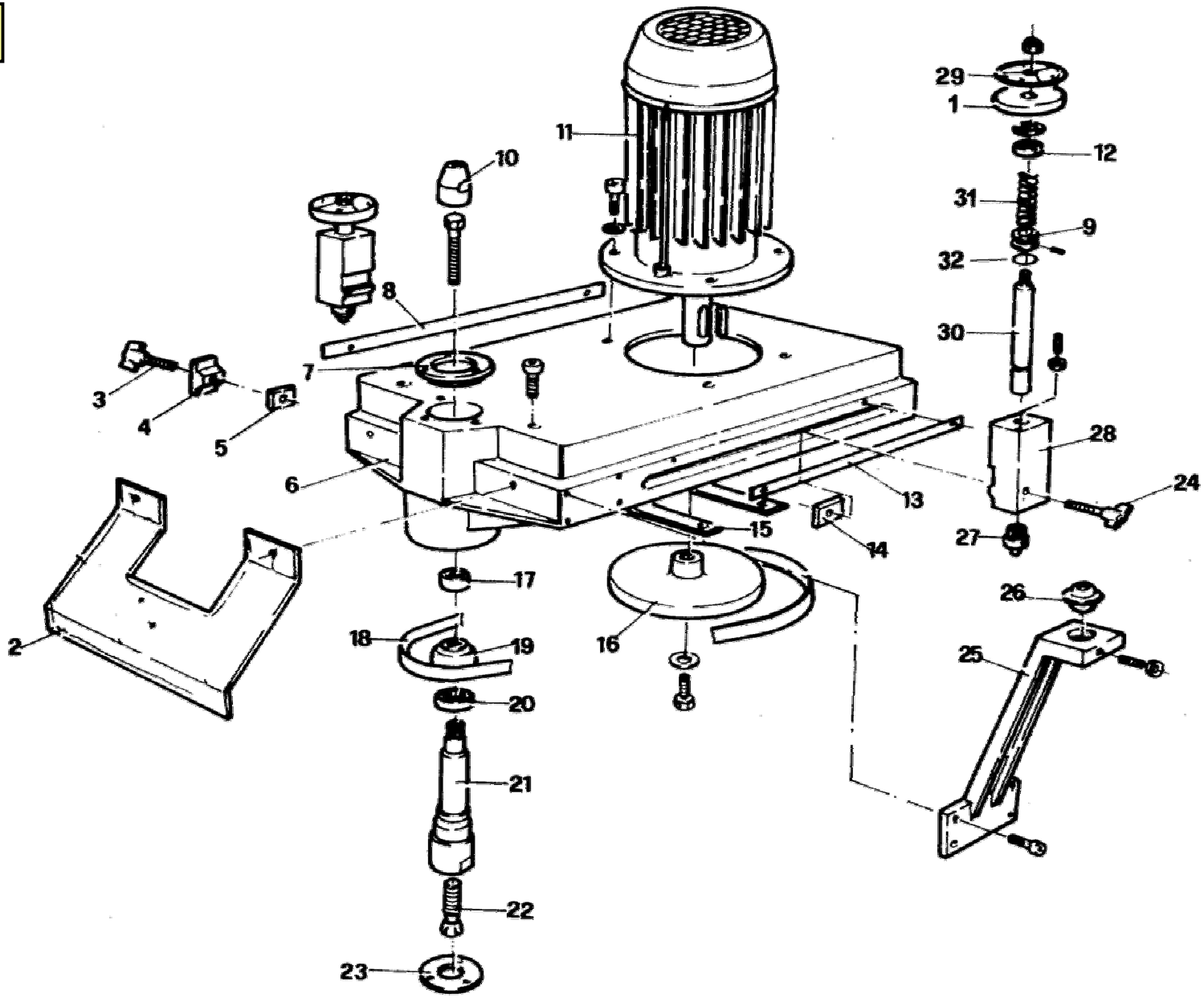
1
2
3
4
5
6
7
8
9
10
11
12
13
14
15
16
17
18
19
20
21
22
23
24
25
26
27
28
29
30
31
32

PAGE 3

COD.	POS.	DESCRIZIONE	DESCRIPTION	DESCRIPTION	BESCHREIBUNG	DESCRIPCION
2801003	01	SUPPORTO TESTINA	HEAD SUPPORT	SUPPORT TETE	KOPFAUFLAGE	SOPORTE CABEZA
2804017	02	VITE	SCREW	VIS	CHRAUBE	TORNILLO
2890409	03	AXK 15.28	AXK 15.28	AXK 15.28	AXK 15.28	AXK 15.28
1804018	04	CHIAVETTA	SPANNER	CLE	SCHLUßEL	LLAVE
2804033	05	CONTROSTAFFA	COUNTER FLASK	CONTRE ETRIER	GEDENKLEIDERBUGEL	CONTRA ABRAZADERA
2805035	06	PROLUNGA FRENO	BRAKE EXTENSION	RALLONGE FREIN	BREMSENSVERLANGERUNG	PROLONGATION FRENO
2890816	07	FRENO	BRAKE	FREIN	BREMSE	FRENO
2890815	08	PISTONE	PISTON	PISTON	KOLBEN	PISTON
2805034	09	PROLUNGA PISTONE	PISTON EXTENSION	RALLONGE PISTON	KOLBENVERLANGERUNG	PROLONGATION PISTON
3390101	10	MOTORE	MOTOR	MOTEUR	MOTOR	MOTOR
2804032	11	STAFFA PISTONE	PISTON FLASK	ETRIER PISTON	KOLBENKLEIDERBUGEL	ABRAZADERA PISTON
2805011	12	ALBERO LEVA	LEVER SHAFT	ARBRE LEVIER	AUSHEBUNGSWELLE	EJE PALANCA
2805012	13	MANICOTTO	SLEEVE	MANCHON	MUFFE	MANGUITO
2811104	14	LEVA	LEVER	LEVIER	AUSHEBUNG	PALANCA
1402017	15	MANIGLIA	HANDLE	POIGNEE	HANDGRIFF	EMPUNADURA
2805009	16	SUPPORTO	SUPPORT	SUPPORT	AUFLAGE	SOPORTE
2890904	17	GIUNTO	CONNECTION	RACCORD	VERBINDER	JUNTURA
2891111	18	MOLLA A GAS	GAS SPRING	RESSORT A GAS	GASFEDER	MUELLE GAS
2802020	19	TESTINA	HEAD	TETE	KOPF	CABEZA
2890403	20	BOCCOLA	BUSH	DOUILLE	BUCHSE	BRIDA
2806010	21	GUIDA	GUIDE	GUIDE	FUHRUNG	GUIA
2811113	22	ALBERINO CENTRALE	CENTRAL SHAFT	ARBRE CENTRAL	ZENTRALWELLE	EJE CENTRAL
2811114	23	ALBERINO LATERALE	SIDE SHAFT	ARBRE LATERAL	SEITEWELLE	EJE LATERAL
2811116	24	PUNTA	BIT	MECHE	FRASE	BROCA
2800026	25	CARTERINO PUNTE	BIT CARTER	MECHE PROTETION	SCHUTZVORRICHTUNG	PROTECCION BROCA
2890402	26	CUSCINETTO	BEARINGS	ROULEMENTS	LAGER	COJINETE
2806021	27	INGRANAGGIO	GEAR	ENGRANAGE	GETRIEBE	ENGRANAJE
2811019	28	COPERCHIETTO	COVER	COUVERCLE	DECKEL	TAPA
2811115	29	PUNTA	BIT	MECHE	FRASE	BROCA
2890410	30	RALLA AS 15.28	WASHER	RONDELLE	RING	ARANDERA

PAGE.3

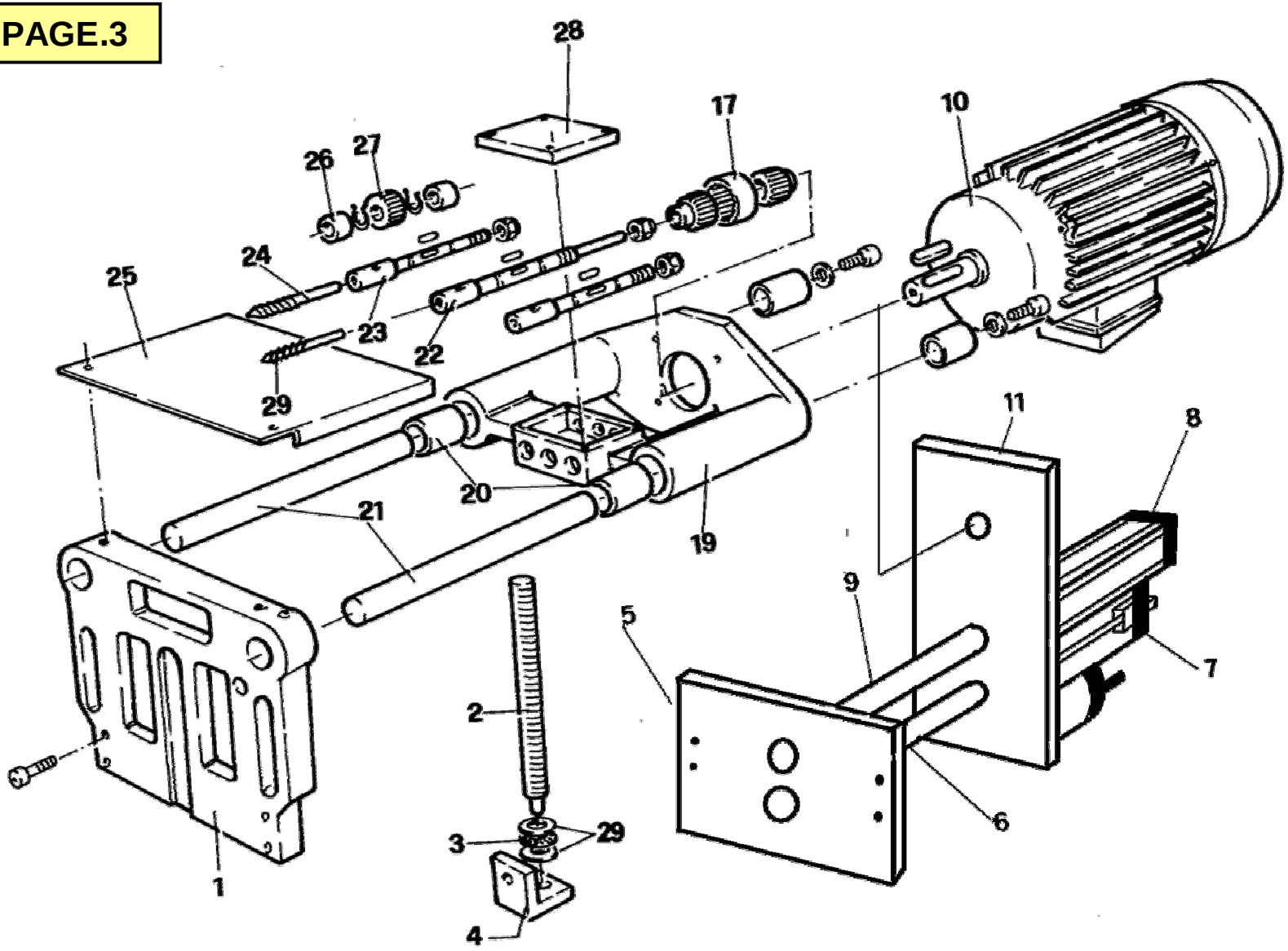

PAGE 4						
COD.	**POS.**	**DESCRIZIONE**	**DESCRIPTION**	**DESCRIPTION**	**BESCHREIBUNG**	**DESCRIPCION**
3490304	01	VOLANTINO	HANDWHEEL	VOLANT	HANDRAD	VOLANTE
2811006	02	GUIDA PROFILO SX	GUIDE	GUIDE	FUHRUNG	GUIA
2890313	03	LEVA A SCATTO	RELEASE HANDLE	LEVIER A DECLIC	SPRINGGRIFF	PALANCA
1490835	04	TAMPONE	PADS	TAMPONS	HALTER	TAPON
1490825	05	PISTONE	CYLINDER	CYLINDRE	ZYLINDER	PISTON
2502039	06	SUPPORTO MORSA	CLAMP SUPPORT	SUPPORT ETAU	SPANNUNGSAUFLAGE	SOPORTE MORDAZA
2504050	07	ZOCCHETTO	PLATE	PLATRE	PLATTE	ZOCALO
1490319	08	LEVA A SCATTO	RELEASE HANDLE	LEVIER A DECLIC	SPRINGGRIFF	PALANCA
2801037	09	SUPPORTO	SUPPORT	SUPPORT	AUFLAGE	SOPORTE
2511037	10	SUPPORTO	SUPPORT	SUPPORT	AUFLAGE	SOPORTE
2802002	11	BASETTA	WORKING TABLE	TABLE DE TRACAIL	ARBEITSTISCH	PIANO TRABAIO
2804036	12	ALBERO	SHAFT	ARBRE	WELLE	EJE
2811039	13	BATTUTA SX	LEFT STOP	BUTEE GAUCHE	L. ANSCHLAG	TOPE I.
2807051	14	PIGNONE	PINION	PIGNON	RITZEL	PINON
2807050	15	CREMAGLIERA	RACK	CREMAILLERE	ZAHNSTANGE	CREMALLERA
2811005	16	GUIDA PROFILO DX	GUIDE	GUIDE	FUHRUNG	GUIA
2811038	17	BATTUTA DX	RIGHT STOP	BUTEE DROITE	L. ANSCHLAG	TOPE D.
1490850	18	VALVOLA DI BLOCCO	BLOCKING VALVE	VALVE DE BLOCAGE	VENTILE	VALVOLA DE BLOQUEO

PAGE.4

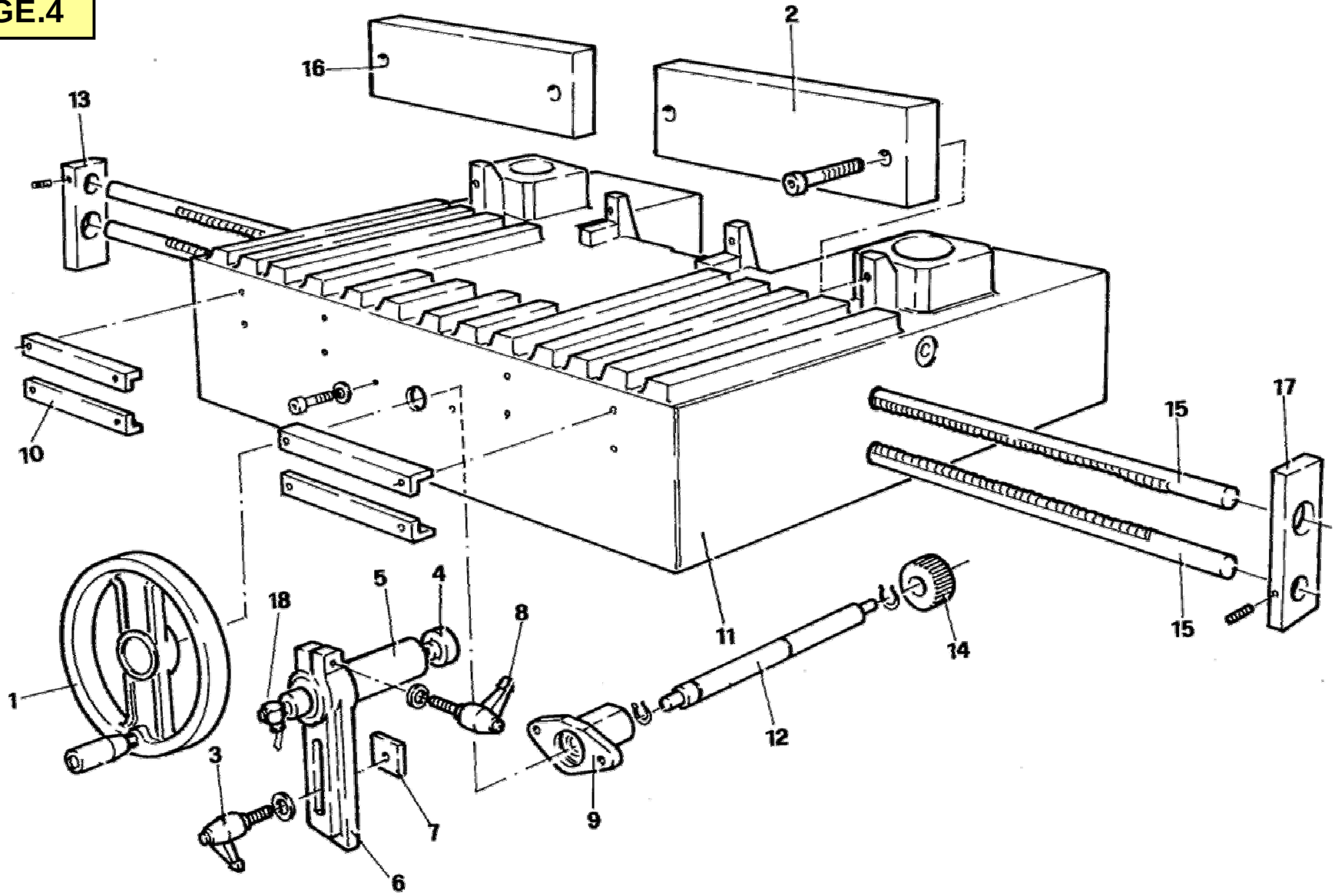

PAGE 5

COD.	POS.	DESCRIZIONE	DESCRIPTION	DESCRIPTION	BESCHREIBUNG	DESCRIPCION
1402017	01	MANIGLIA	HANDLE	BRANCHE	GRIFF	EMPUNADURA
1411116	02	LEVA SX	LEFT LEVER	LEVIER GAUCHE	LINKES HEBEL	PALANCA I.
1402008	03	SUPPORTO LEVA SX	LEFT LEVER SUPPORT	SUPP.T LEVIER GAUCHE	LINKES HEBEL AUFLAGE	SOPORTE PALANCA I.
1406037	04	GUIDA TRASVERSALE	GUIDE	GUIDE	FUHRUNG	GUIA
1403033	05	BOCCOLA FULCRO LEVA	BUSH	DOUILLE	BUCHSE	BRUJULA
1491108	06	MOLLA A GAS	GAS SPRING	RESSORT A GAS	GASFEDER	MUELLE GAS
2604019	07	FULCRO LEVA	FULCRUM PIN LEVER	POINT D'APPUIS LEVER	AUSHEBUNGDREHPUNKT	FULCRO PALANCA
1404010	08	BIELLA	ROD	BIELLE	PLEUEL	BIELA
1490921	09	SNODO AS 16M10 DX	ARTICULATION	JOINT	GWLWNK	ARTICULACION
1405012	10	LEVA DX	RIGHT LEVER	LEVIER DROITE	R. HEBEL	PALANCA D.
1490412	11	BOCCOLA	BUSH	DOUILLE	BUCHSE	BRIDA
1490316	12	LEVA A SCATTO 6X20	RELEASE LEVER	LEVIER A DECLIC	AUSHEBUNG	PALANCA
1405043	13	BATTUTA VERTICALE	VERT. STOP	BUTEE VERTICALE	ANSCHLAG	TOPE
1404042	14	SUPP.ASTA BATT. V. PRF.	SUPPORT	SUPPORT	AUFLAGE	SOPORTE
1406036	15	GUIDA VERTICALE	VERT. GUIDE	GUIDE VERTICALE	FUHRUNG	GUIA VERTICAL
1402003	16	SUPPORTO LAT.LE SX	LEFT SIDE SUPPORT	SUPPORT LAT. GAUCHE	L. SEITE AUFLAGE	SOPORTE LAT. IZQUIER
1402002	17	SUPPORTO LAT.LE DX	RIGHT SIDE SUPPORT	SUPPORT LAT. DROITE	R. SEITE AUFLAGE	SOPORTE LAT. DERECH
1405015	18	SUPPORTO RIGA MET.CA	METRIC RULERSUPPORT	SUPPORT REGLE METRIQ	MAßTABSAUFLAGE	SOPORTE REGLA MET
1491067	19	STECCA METRICA 200SUP	METRIC RULER	REGLE METRIQUE	MAßTAB	REGLA METRICA
1406038	20	GUIDA LONGITUD.LE	GUIDE	GUIDE	FUHRUNG	GUIA
1410035	21	MATRICE (DIMA) SX	LEFT TEMPLATE	GABARIT GAUCHE	L. SCHABLONE	PLANTILLA
1410034	22	MATRICE (DIMA) DX	RIGHT TEMPLATE	GABARIT DROITE	R. SCHABLONE	PLANTILLA
1404019	23	TELAIO SUPP. DIME	FRAME	CHASSIS	RAHMEN	CHASIS
1490317	24	LEVA A SCATTO 8X30	RELEASE LEVER	LEVIER A DECLIC	AUSHEBUNG	PALANCA
1402004	25	CROCIERA ORIZZ.	ALUMINIUM MELTING	FUSION EN ALU	ALU-SCHMELZEN	FUSION EN ALUMINIO
1490411	26	BUSSOLA 25/40	BUSH	DOUILLE	BUCHSE	BRUJULA
1405028	27	PERNO	PIN	BUJON	STIFT	PIERNO
1491001	28	STECCA METRICA	METRIC RULER	REGLE METRIQUE	MAßTAB	REGLA METRICA
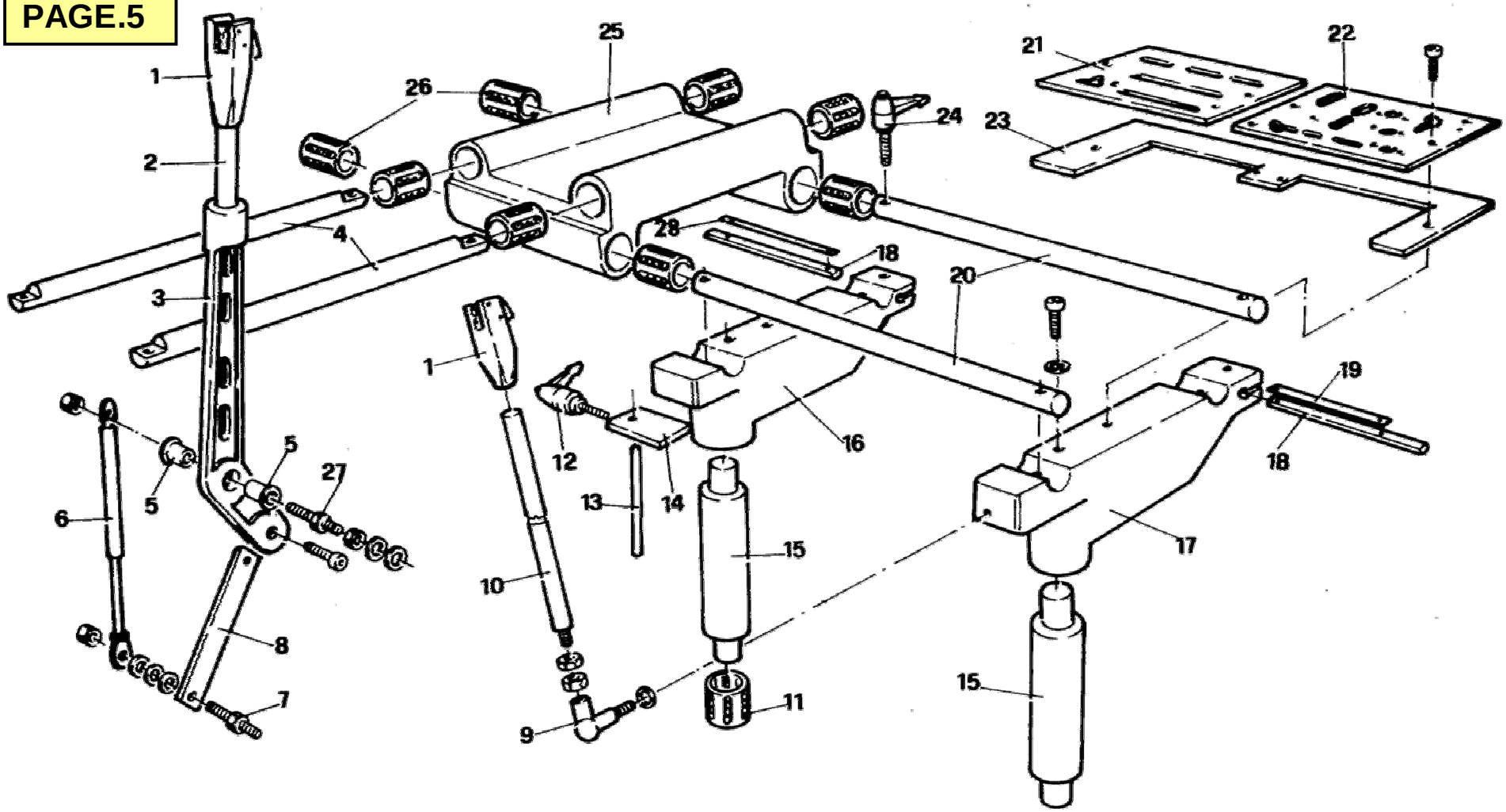
PAGE.5